MCHC series

PARALLEL GRIPPER (2-Finger)

mindman

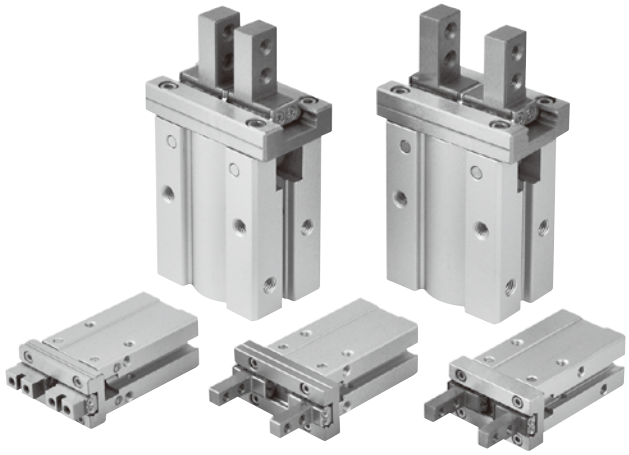

Features

- Integral linear guide used for high rigidity and high precision.
- The material of finger is martensitic stainless steel.
- Body thickness tolerance ±0.05mm.
- Bottom pin holes for accurate re-locating.
- Grooves on the body for sensor switch to be inserted into.
- The gripping stroke of long-stroke type is approximately double compare with standard type.
- Standard with magnet.

Specification

Model		MCHC				
Acting type		Double acting / Single acting				
Tube I.D. (mm)		6	10	16	20	25
Opening / Closing stroke (mm)		4	4(8)	6(12)	10(18)	14(22)
Port size		M3×0.5		M5×0.8		
Medium		Air				
Operating pressure range	Double acting	0.15~0.7	0.2~0.7	0.1~0.7 MPa		
	Single acting	–	0.35~0.7	0.25~0.7 MPa		
Ambient temperature		-10~+60°C (No freezing)				
Repeatability		± 0.01 mm				
Max. frequency		180 (120) cycle / min				
Lubricator		Not required				
Sensor switch (*)		RDE, RDE-D: Non-contact				
Weight (g)	Double acting	27	55(56)	124(125)	250(252)	461(463)
		–	[53]	[124]	[244]	[450]
	Single acting	–	70	145	270	490

* ( ) value for long stroke, [ ] value for flat type.
* RDE, RDE-D specification, please refer to page 5-6.

Order example

MCHC □ – 20 – □ N

Model	Tube ID.	Style (*1)	Type (*2)
MCHC (Standard stroke)	**6**	Blank: Double acting	Blank:Standard **1**: Side tapped mounting **2**: Standard (Through hole)
	10 **16** **20** **25**	Blank: Double acting **S**: Single acting / Normally open **C**: Single acting / Normally closed	Blank:Standard **1**: Side tapped mounting **2**: Standard (Through hole) **3**: Flat **N**: Narrow **N1**: Narrow type side tapped mounting **N2**: Narrow (Through hole)
MCHCL (Long stroke)	**10** **16** **20** **25**	Blank: Double acting	Blank:Standard **1**: Side tapped mounting **2**: Standard (Through hole)

*1. STYLE

Blank: Double acting	**S**: Single acting / Normally open	**C**: Single acting / Normally closed
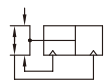		

*2. TYPE

Blank: Standard	**1**: Side tapped mounting	**2**: Standard (Through hole)	**3**: Flat
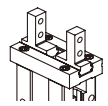	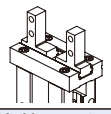	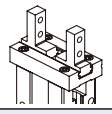	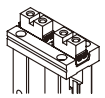
N: Narrow	**N1**: Narrow type side tapped mounting	**N2**: Narrow (Through hole)	
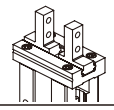	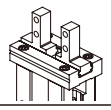	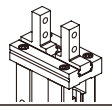	

Gripping force

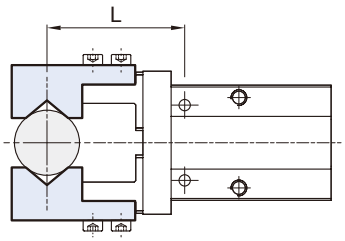

Tube I.D. (mm)		6	10	16	20	25
Double acting	External	3.3(0.3)	11(1.1)	34(3.5)	42(4.3)	65(6.6)
	Internal	6.1(0.6)	17(1.7)	45(4.6)	66(6.7)	104(10.6)
Single acting / Normally open	External	–	7.1(0.7)	27(2.8)	33(3.4)	45(4.6)
Single acting / Normally closed	Internal	–	13(1.3)	38(3.9)	57(5.8)	83(8.5)

* Operation pressure 0.5 MPa, gripping length 20mm, the effective gripping force for each finger is *** N(kgf).

MCHC Inside structure & Parts list ø6

PARALLEL GRIPPER (2-Finger)

mindman

Double acting

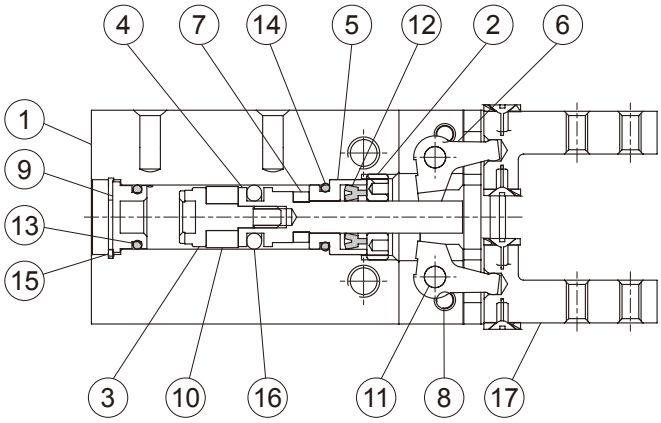

Material

No.	Part name	Material	Q'y	Repair kits (inclusion)
1	Body	Aluminum alloy	1	
2	Front cap	Stainless steel	1	
3	Magnet holder	Stainless steel	1	
4	Piston rod	Stainless steel	1	
5	Rod cover	Stainless steel	1	
6	Lever	Stainless steel	2	
7	Cushion pad	PU	1	●
8	Screw	Stainless steel	4	
9	Head cover	Aluminum alloy	1	
10	Magnet ring	Magnet material	1	
11	Pin	Steel	2	
12	Rod packing	NBR	1	●
13	O-ring	NBR	1	
14	O-ring	NBR	1	
15	Snap ring	Carbon steel	1	●
16	Piston packing	NBR	1	●
17	Gripping set	Stainless steel (*)	1	

* Bearing steel balls as standard.

Order example of repair kits

Tube I.D.	Repair kits
ø6	**PS-MCHC-6**

MCHC Inside structure & Parts list ø10~ø25

PARALLEL GRIPPER (2-Finger)

mindman

Double acting

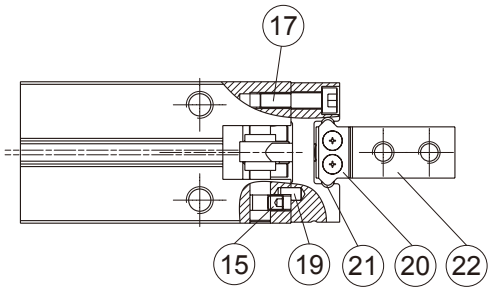

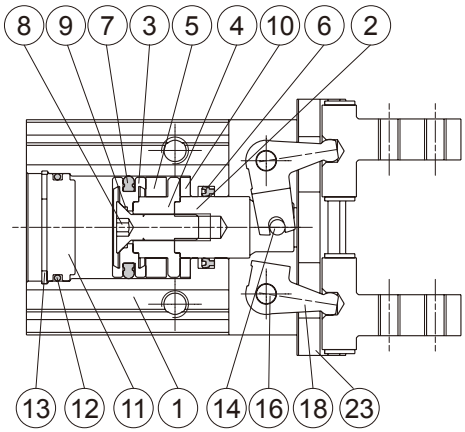

Single acting

Normally open

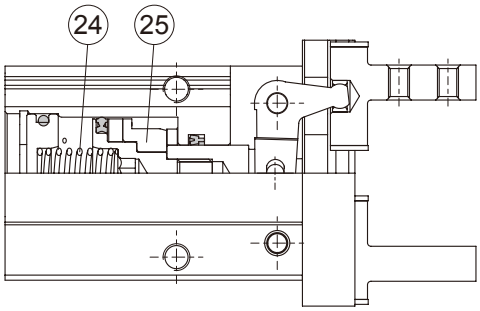

Single acting

Normally closed

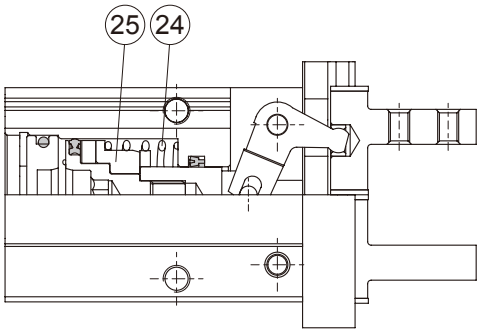

Material

No.	Tube I.D. / Part name	10	16	20	25	Q'y	Repair kits (inclusion)
1	Body	Aluminum alloy				1	
2	Piston rod	Stainless steel				1	
3	Piston	Aluminum alloy				1	
4	Piston R	*1	Aluminum alloy			1	
5	Magnet ring	Magnet material				1	
6	Rod packing	NBR				1	●
7	Piston packing	NBR				1	●
8	Screw	—	Stainless steel			1	
9	O-ring	—	NBR			1	●
10	Cushion pad	PU				1	●
11	Head cover	Aluminum alloy				1	
12	Cover ring	NBR				1	●
13	Stop ring	*2	Stainless steel			1	
14	Spindle river	Carbon steel				1	
15	Screw	Carbon steel				4	
16	Grip rivet	Carbon steel				2	
17	Bolt	Stainless steel				4	
18	Lever	Stainless steel				2	

No.	Tube I.D. / Part name	10	16	20	25	Q'y	Repair kits (inclusion)
19	Pin	Carbon steel				2	
20	Roller stopper	Stainless steel				4	
21	Steel balls	Bearing steel				24	
22	Finger	Stainless steel				2	
23	Guide	Stainless steel				1	
24	Magnet holder	Stainless steel				1	
25	Stop ring	Stainless steel				1	

*1. Stainless steel *2. Carbon steel

Order example of repair kits

Tube I.D.	Repair kits
ø10	**PS-MCHC-10**
ø16	**PS-MCHC-16**
ø20	**PS-MCHC-20**
ø25	**PS-MCHC-25**

MCHCL Inside structure & Parts list ø10~ø25

PARALLEL GRIPPER (2-Finger)

mindman

Double acting

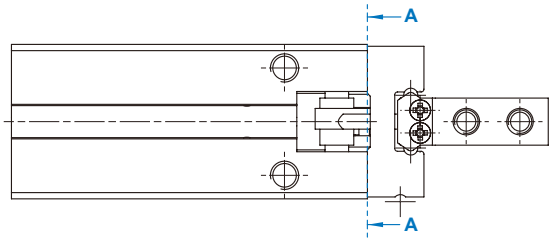

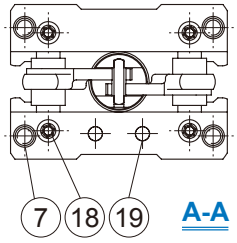

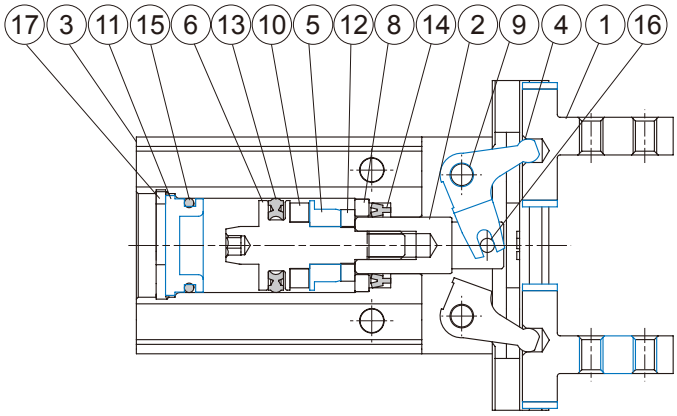

Material

No.	Tube I.D. / Part name	10	16	20	25	Q'y	Repair kits (inclusion)
1	Gripping set	Stainless steel (*1)				1	
2	Piston rod	Stainless steel				1	
3	Body	Aluminum alloy				1	
4	Lever	Stainless steel				2	
5	Spring holder	Stainless steel				1	
6	Piston	Stainless steel				1	
7	Bolt	Stainless steel				4	
8	Stop ring	*2	–			1	
9	Grip rivet	Mild carbon steel				2	
10	Magnet ring	Magnet material				1	
11	Head cover	Aluminum alloy				1	
12	Gasket	NBR				1	●
13	Piston packing	NBR				1	●
14	Rod packing	NBR				1	●
15	O-ring	NBR				1	●
16	Spindle river	Carbon steel				1	
17	Snap ring	*3	Stainless steel			1	
18	Hexgon screw	Stainless steel				4	
19	Pin	Carbon steel				2	

*1. Bearing steel balls as standard.
2. Stainless steel 3.Carbon steel

Order example of repair kits

Tube I.D.	Repair kits
ø10	**PS-MCHCL-10**
ø16	**PS-MCHCL-16**
ø20	**PS-MCHCL-20**
ø25	**PS-MCHCL-25**

Confirmation of external force on fingers

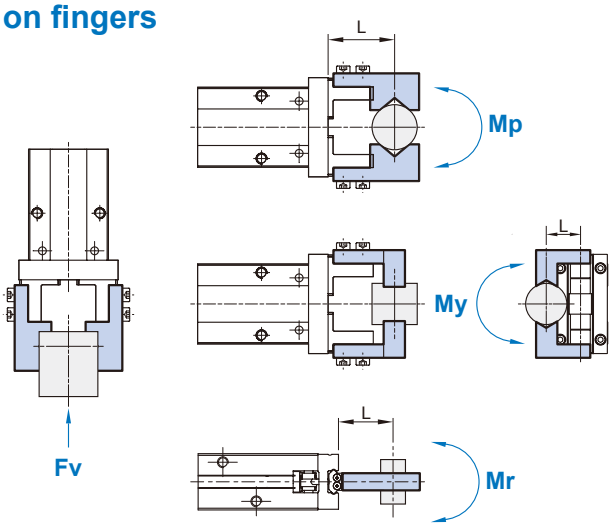

L: distance to the point at which the load is applied (mm)

Tube I.D. (mm)	Allowable vertical load Fv (N)	Maximum allowable moment		
		Pitch moment Mp (N-m)	Yaw moment My (N-m)	Roll moment Mr (N-m)
6	10	0.04	0.04	0.08
10	58	0.26	0.26	0.53
16	98	0.68	0.68	1.36
20	147	1.32	1.32	2.65
25	255	1.94	1.94	3.88

* Values for load and moment in the table indicate static values.

Installation of sensor switch

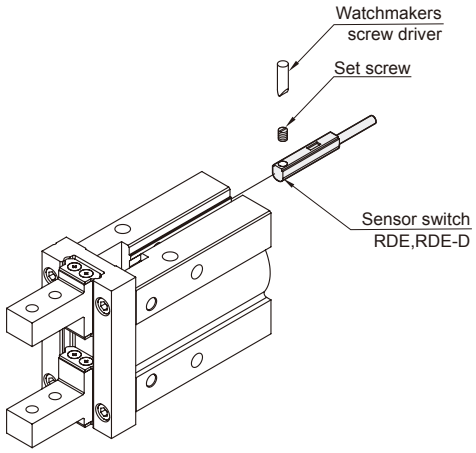

Allowable load calculation

$$\text{Allowable load } F(N) = \frac{M(\text{maximum allowable moment})(N\cdot m)}{L(m)}$$

Example

When a static load of f=20N is operating,which applies pitch moment to point L=25mm from the **MCHC-16** guide.

$$\text{Allowable load } F(N) = \frac{0.68\ (N\cdot m)}{25\times10^{-3}(m)}$$

$$= 27.2\ (N)$$

Load f=20 (N) < 27.2 (N), so can be used.

Model selection suggestions

1. For normal gripping and carrying usage, the recommended safe factor (a) is 4.
2. The value of gripping force of single finger can be found at the gripping force table.
3. The safe factor (a) have to be higher if the gripper is using with a great accelerated velocity or impaction condition.

Effective gripping force (Double acting)

Indication of effective force.
The effective gripping force shown in the graphs to the right is expressed as F, which is the thrust of one finger, when both fingers and attachments are in full contact with the workpiece as shown in the figure below.

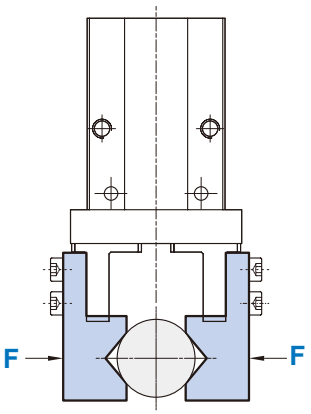

1N=0.102 kgf
1MPa=10.2 kgf/cm^2

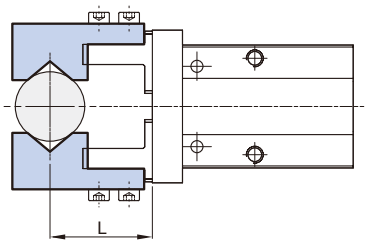

External grip

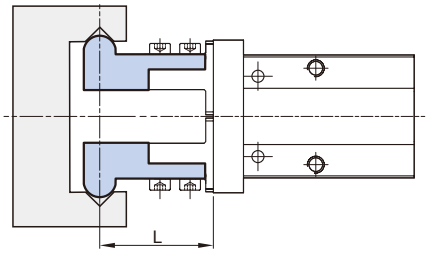

Internal grip

External gripping force

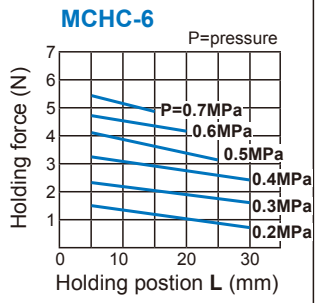

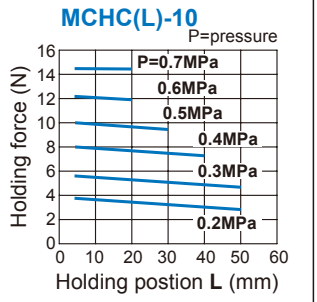

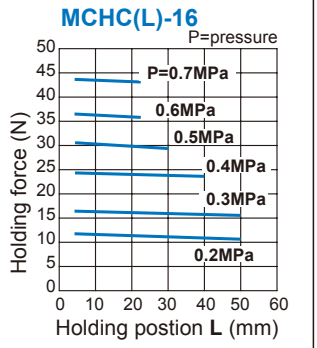

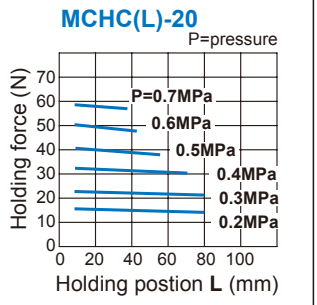

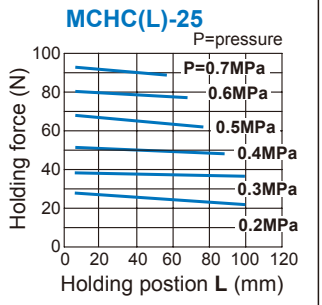

Internal gripping force

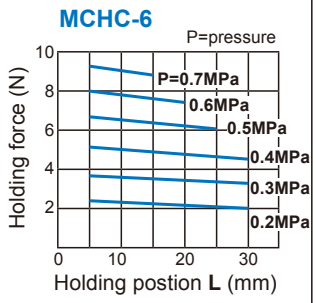

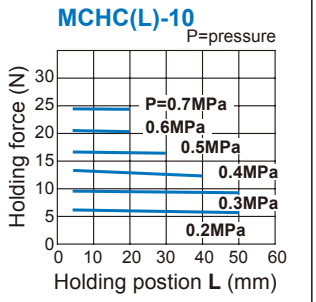

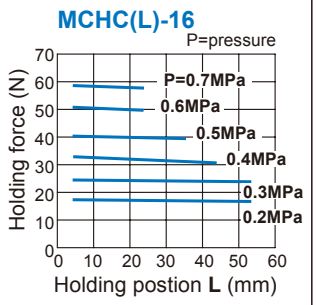

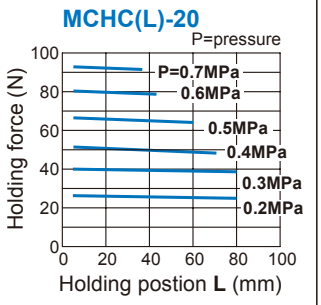

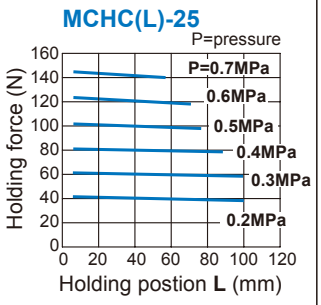

Effective gripping force (Single acting)

Indication of effective force.
The effective gripping force shown in the graphs to the right is expressed as F, which is the thrust of one finger, when both fingers and attachments are in full contact with the workpiece as shown in the figure below.

1N=0.102 kgf
1MPa=10.2 kgf/cm^2

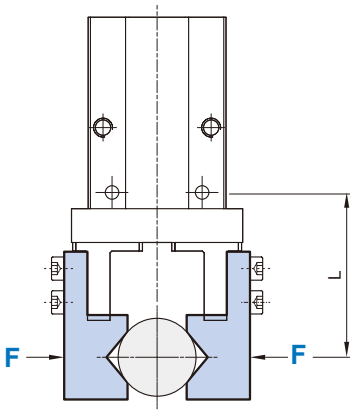

External grip
(Single acting / Normally open)

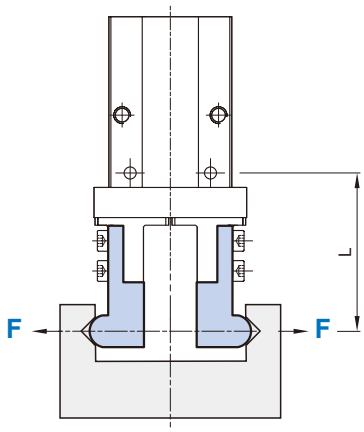

Internal grip
(Single acting / Normally closed)

External gripping force
Single acting / N.O.

MCHC-10-S

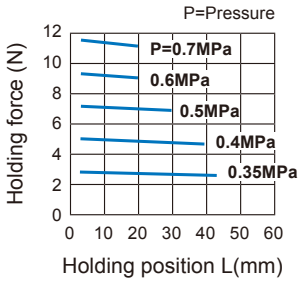

MCHC-16-S

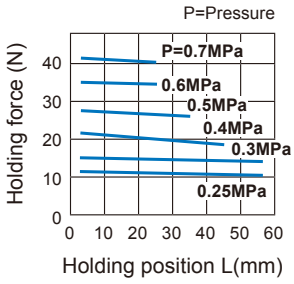

MCHC-20-S

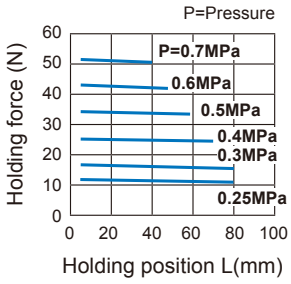

MCHC-25-S

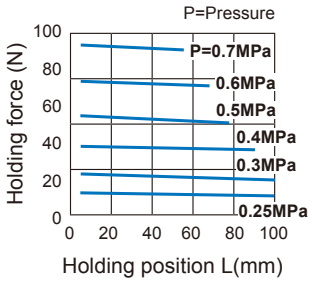

Internal gripping force
Single acting / N.C.

MCHC-10-C

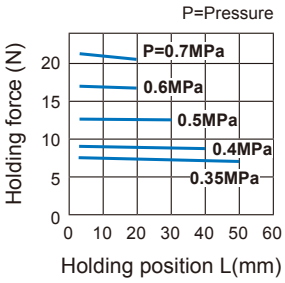

MCHC-16-C

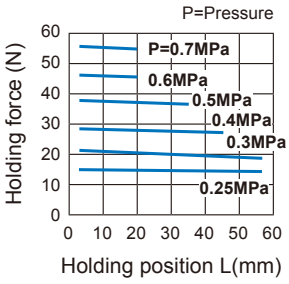

MCHC-20-C

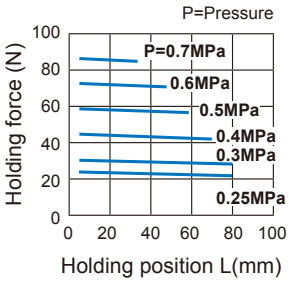

MCHC-25-C

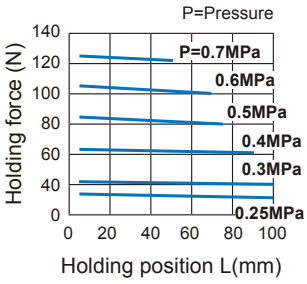

Confirmation of gripping point

- The air gripper should be operated so that the workpiece gripping point "L" and the amount of overhang "H" stay within the range shown for each operating pressure given in the graphs to the right.
- If the workpiece gripping point goes beyond the range limits, this will have an adverse effect on the life the air gripper.

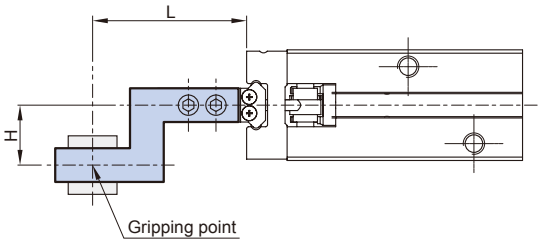

External grip

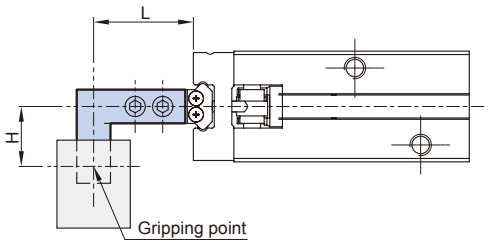

Internal grip

External gripping force

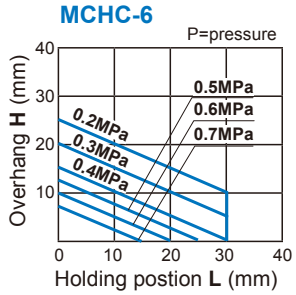

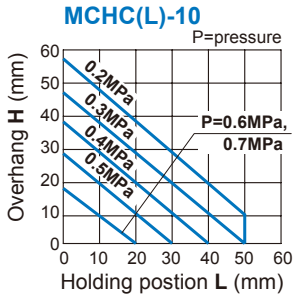

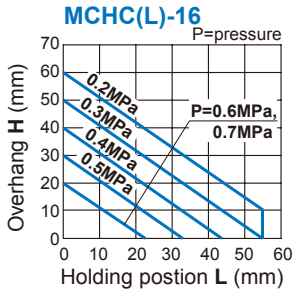

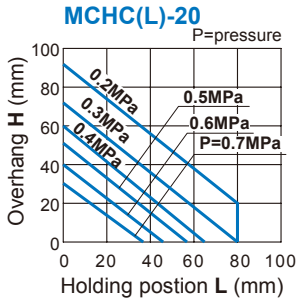

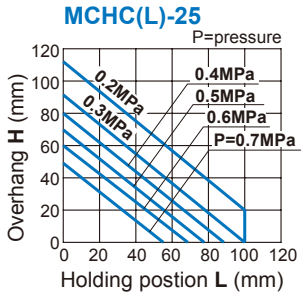

Internal gripping force

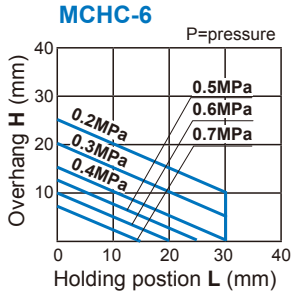

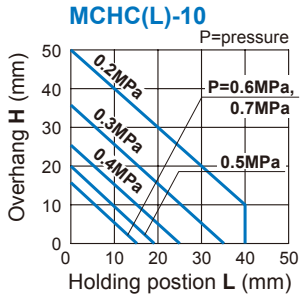

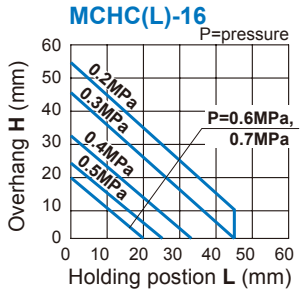

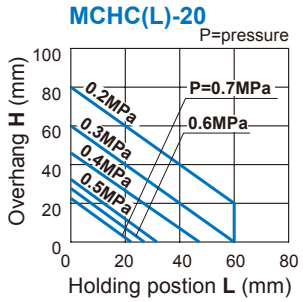

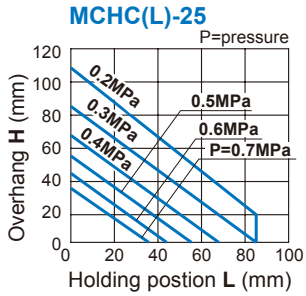

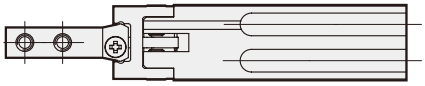

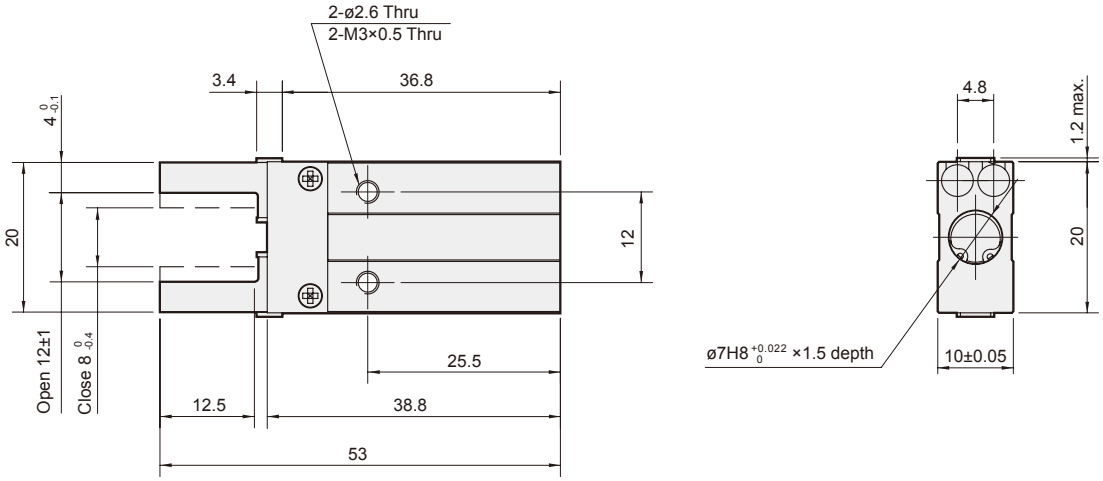
2-ø2.6 Thru
2-M3×0.5 Thru
3.4
36.8
4 0 -0.1
20
12
Open 12±1
Close 8 0 -0.4
25.5
12.5
38.8
53
4.8
1.2 max.
20
ø7H8 +0.022 0 ×1.5 depth
10±0.05

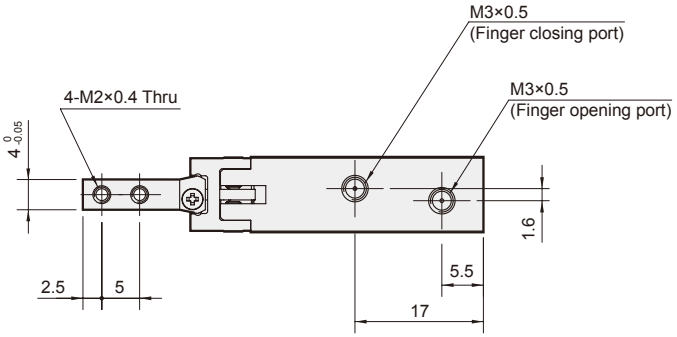
M3×0.5
(Finger closing port)
4-M2×0.4 Thru
M3×0.5
(Finger opening port)
4 0 -0.05
1.6
5.5
2.5
5
17

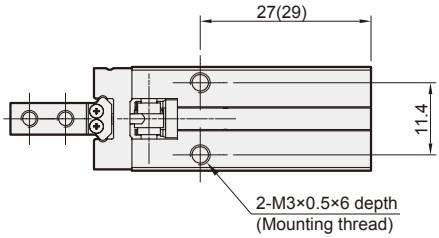

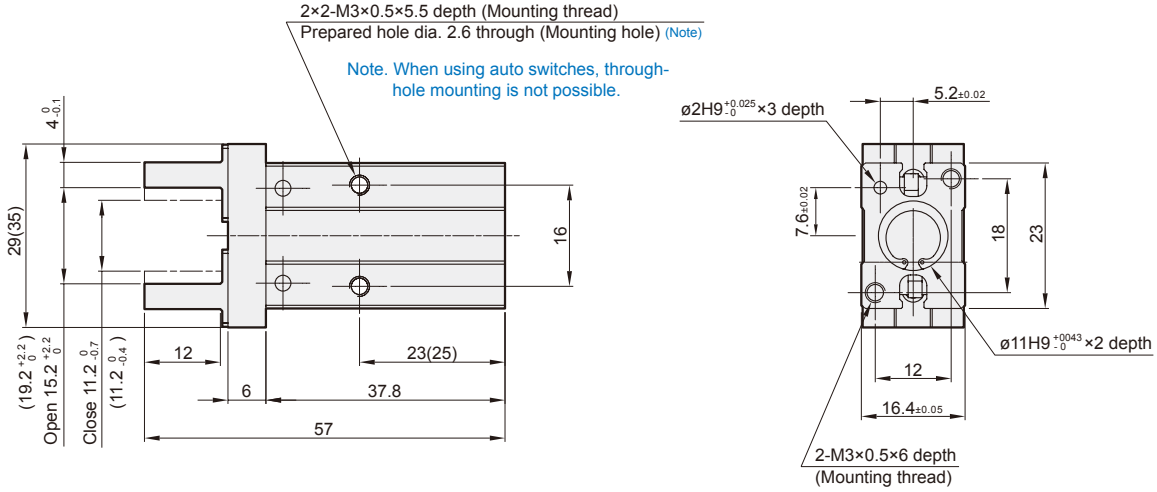

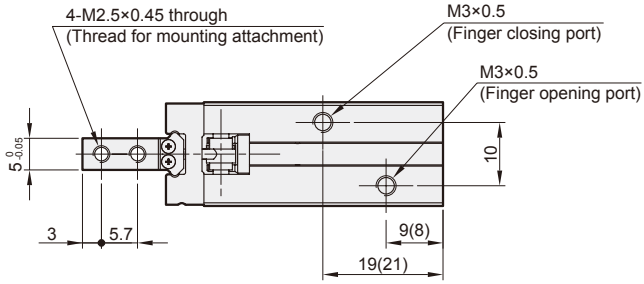

*( ) for long stroke value.

Finger position – Narrow type

MCHC(L)-10-N

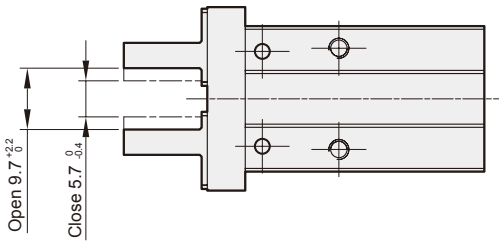

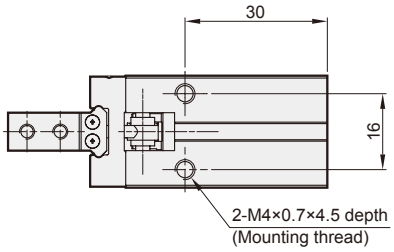

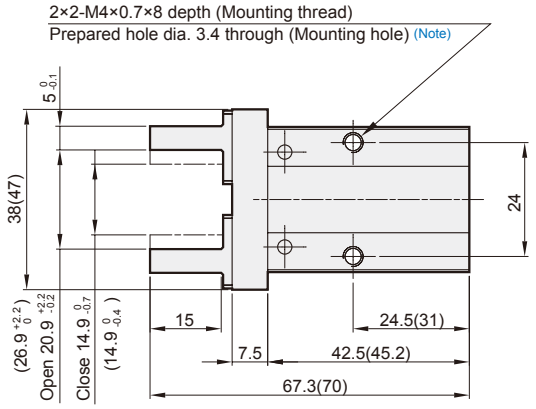

Note. Through-hole mounting is not possible when using the auto switch at the square groove.

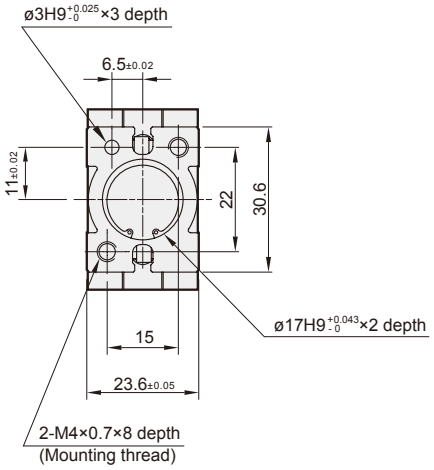

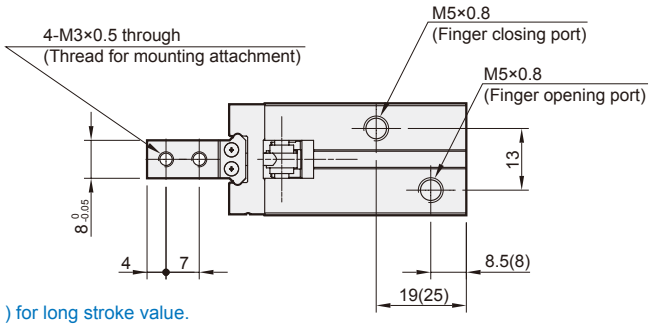

*( ) for long stroke value.

Finger position – Narrow type

MCHC(L)-16-N

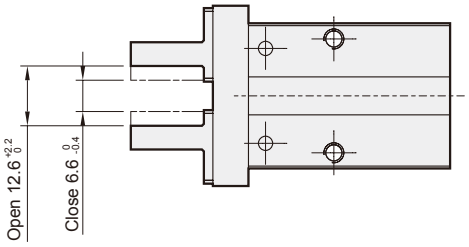

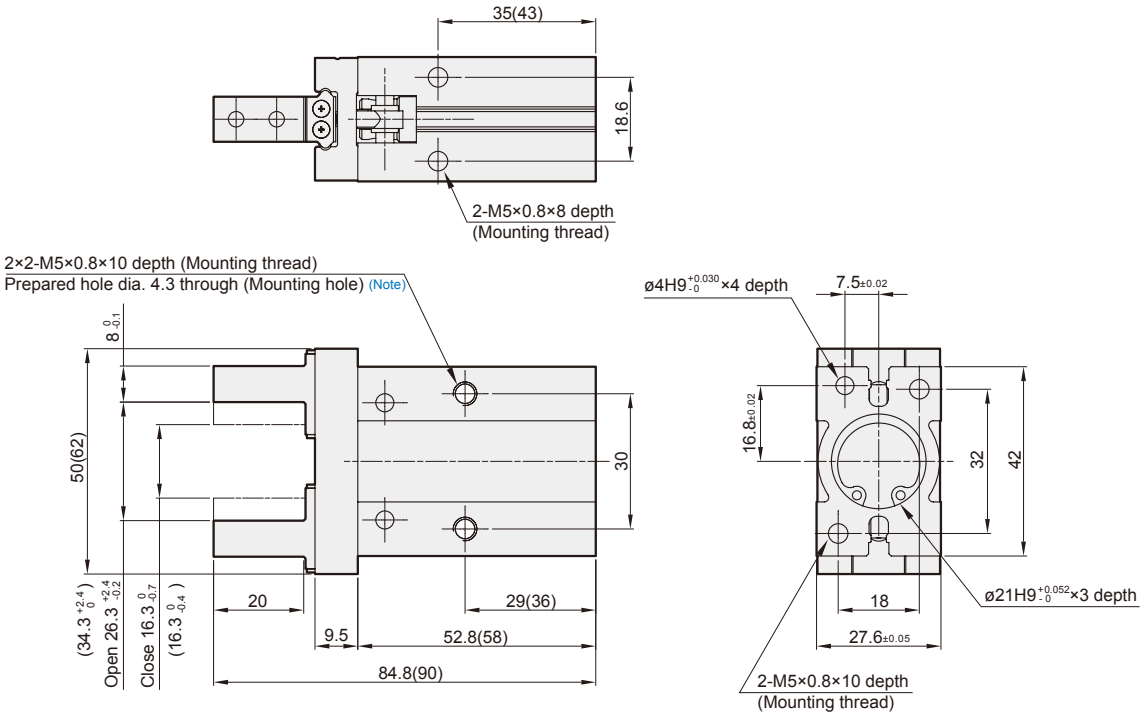

Note. Through-hole mounting is not possible when using the auto switch at the square groove.

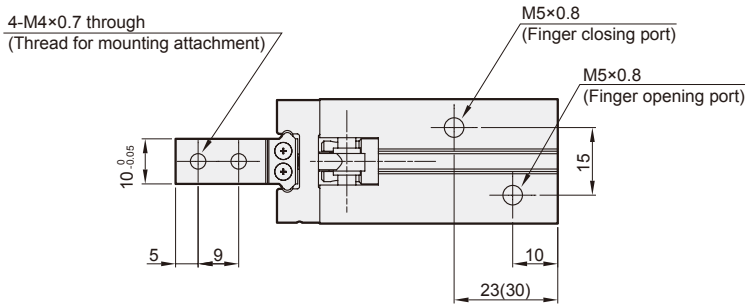

*( ) for long stroke value.

Finger position – Narrow type

MCHC(L)-20-N

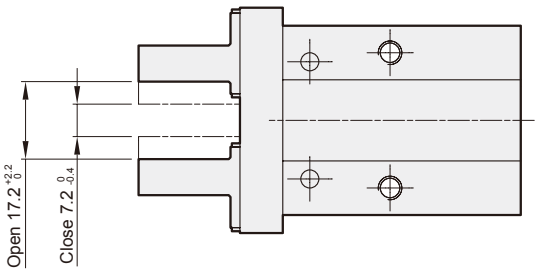

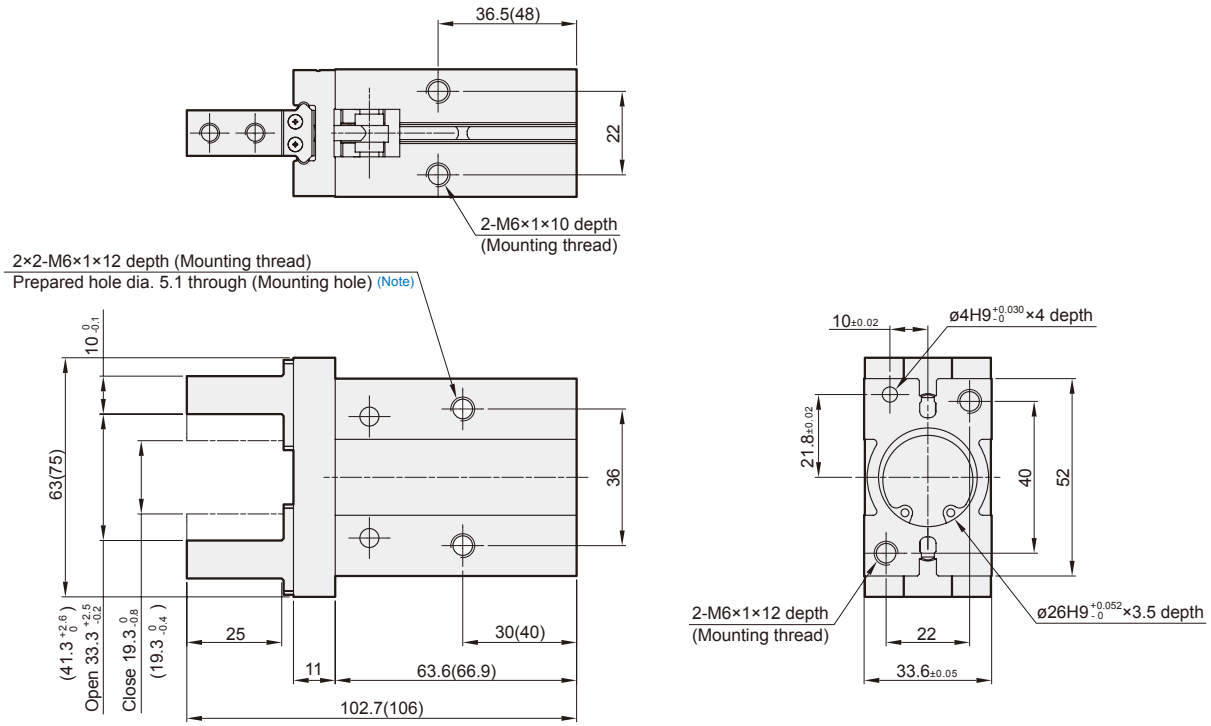

Note. Through-hole mounting is not possible when using the auto switch at the square groove.

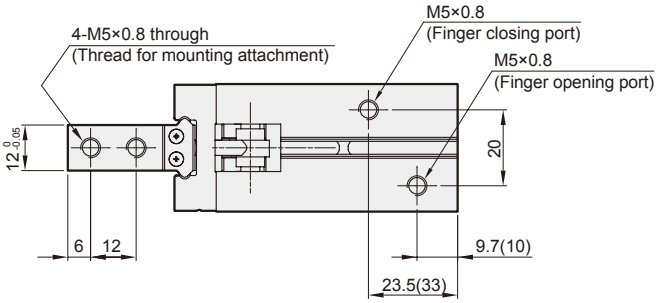

*( ) for long stroke value.

Finger position – Narrow type

MCHC(L)-25-N

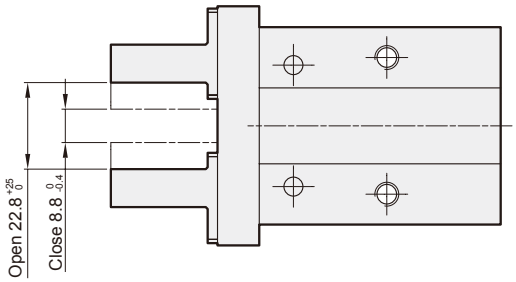

MCHC*-1, N1 Side tapped mounting

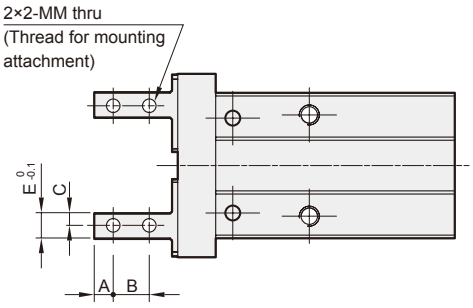

Code / Tube I.D.	A	B	C	E	MM
6	2.5	5	2	4	M2×0.4
10	3	5.7	2	4	M2.5×0.45
16	4	7	2.5	5	M3×0.5
20	5	9	4	8	M4×0.7
25	6	12	5	10	M5×0.8

MCHC*-2, N2 Through hole type

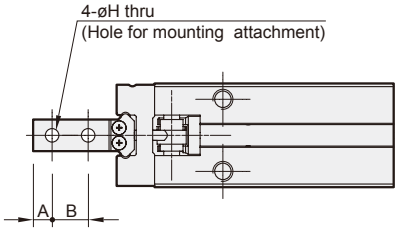

Code / Tube I.D.	A	B	H
6	2.5	5	ø2.4
10	3	5.7	ø2.9
16	4	7	ø3.4
20	5	9	ø4.5
25	6	12	ø5.5

MCHC*-3 Flat type

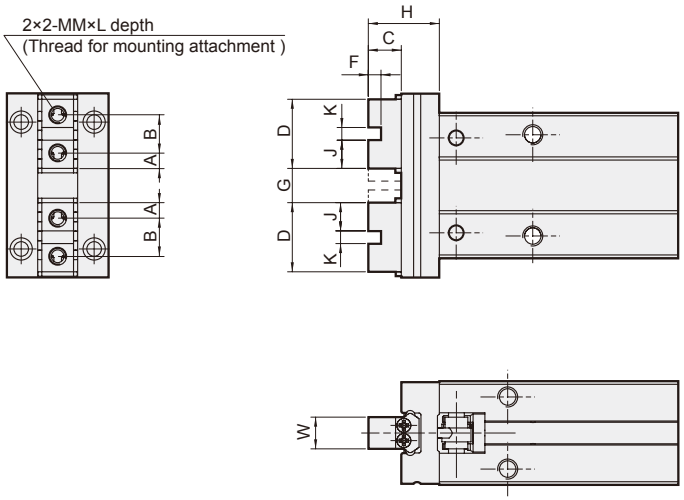

Code / Tube I.D.	A	B	C	D	F	G Open	G Closed	H	J	K	MM	L	W
10	2.45	6	5.2	10.9	2	5.4 $^{+2.2}_{0}$	1.4 $^{0}_{-0.2}$	11.2	4.45	2H9 $^{+0.025}_{0}$	M2.5×0.45	5	5 $^{0}_{-0.05}$
16	3.05	8	8.3	14.1	2.5	7.4 $^{+2.2}_{0}$	1.4 $^{0}_{-0.2}$	15.8	5.8	2.5H9 $^{+0.025}_{0}$	M3×0.5	6	8 $^{0}_{-0.05}$
20	3.95	10	10.5	17.9	3	11.6 $^{+2.3}_{0}$	1.6 $^{0}_{-0.2}$	20	7.45	3H9 $^{+0.025}_{0}$	M4×0.7	8	10 $^{0}_{-0.05}$
25	4.90	12	13.1	21.8	4	16 $^{+2.5}_{0}$	2 $^{0}_{-0.2}$	24.1	8.9	4H9 $^{+0.03}_{0}$	M5×0.8	10	12 $^{0}_{-0.05}$